SB-TT895CH (INTERNO900CH)

SPECIFICATIONS

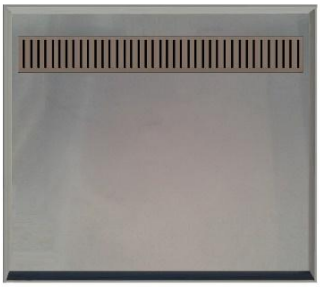

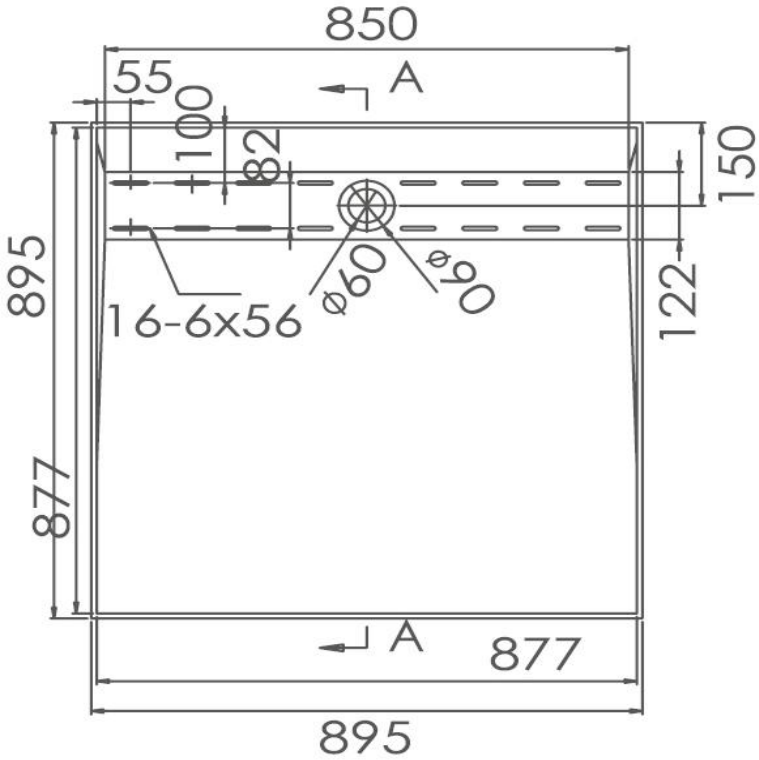

WARRANTY INFORMATION:

7 Year Replacement: Complete Product for Shower Base & Tile Tray Components and Labour: **1 Year**

All products have a full 1 year in house labour warranty from date of purchase

ZENMO
Zen-inspired, Modern Living

ADDRESS: 42 Castro Way, Derrimut VIC 3026
PHONE: (03) 8390 6300
OFFICE: ect_sales@outlook.com
SERVICE: ect_service@outlook.com
WEBSITE: www.zenmo.com.au